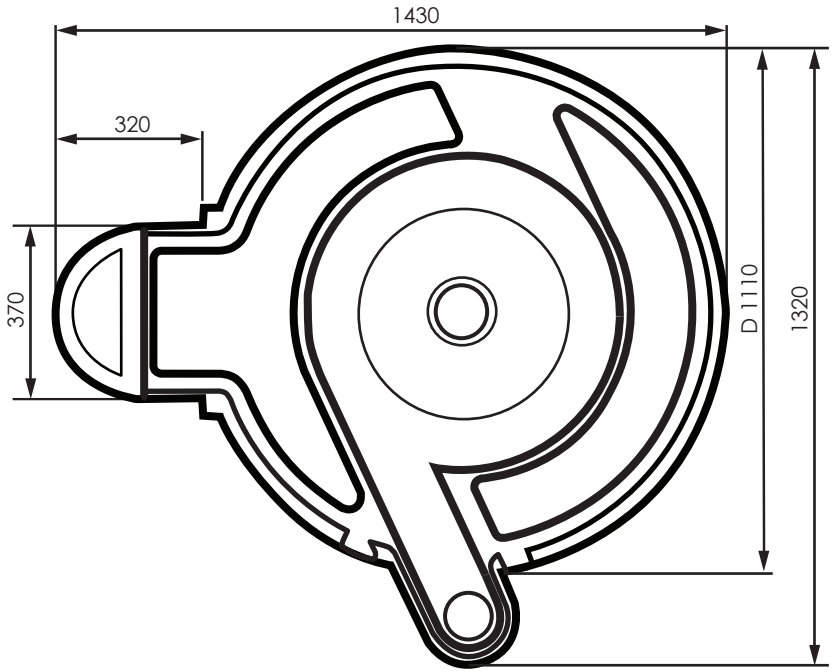
1430
320
370
D 1110
1320

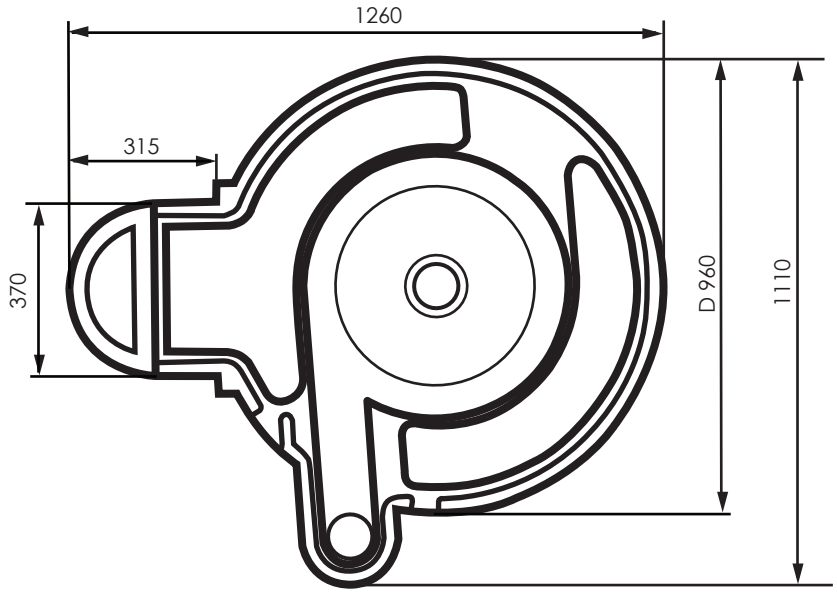
1260
315
370
D 960
1110

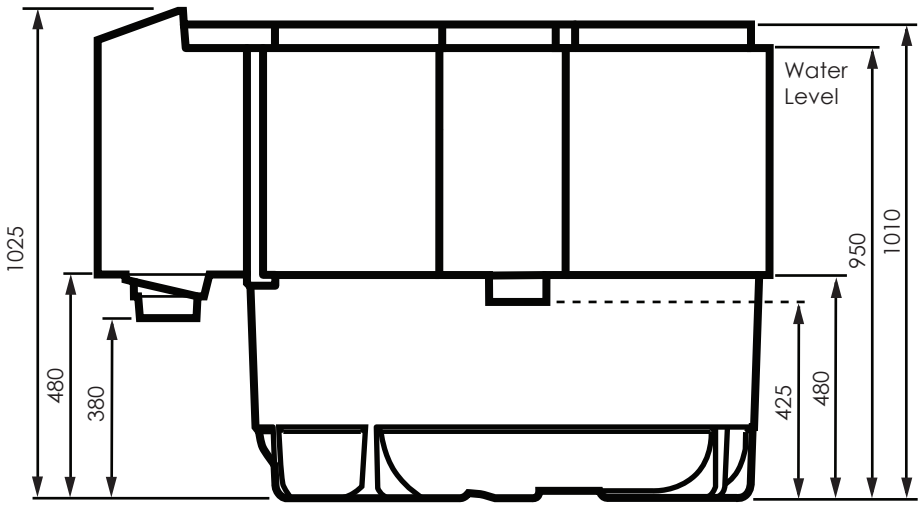
Water
Level
1025
480
380
950
1010
425
480

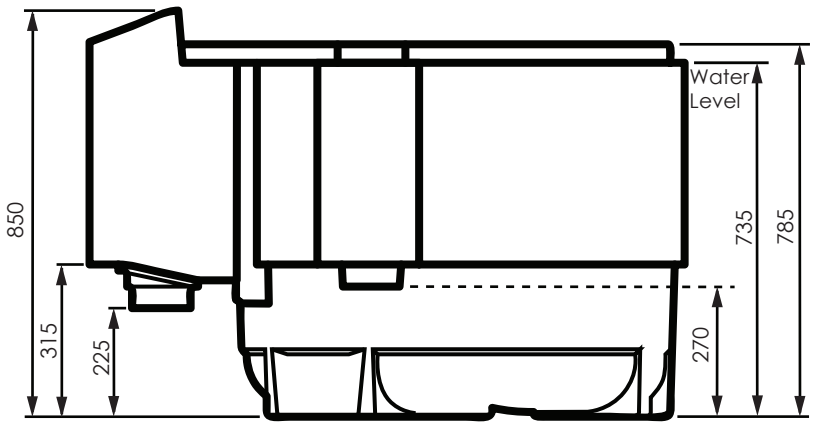
Water
Level
850
315
225
735
785
270